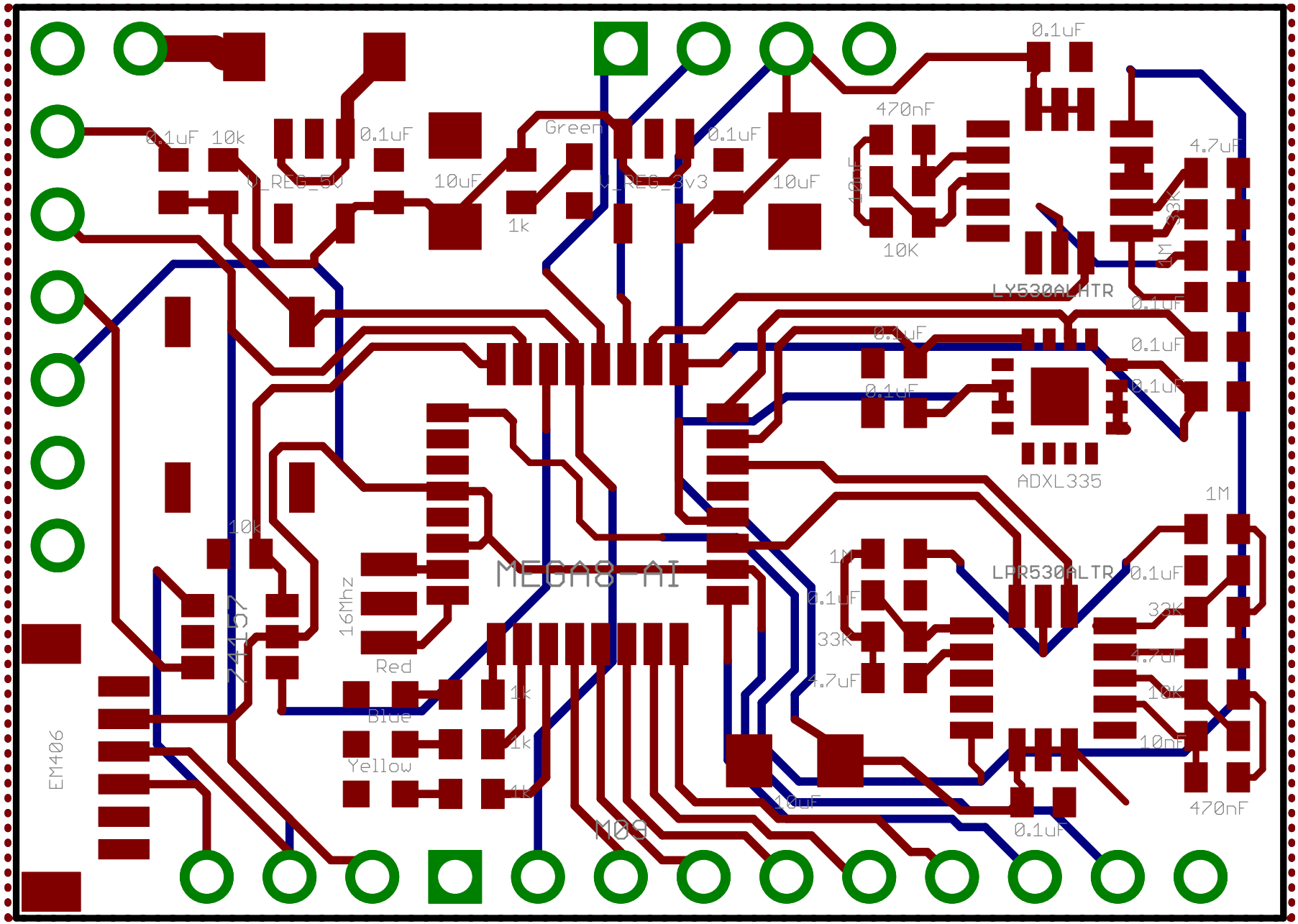

DIYDrones.com