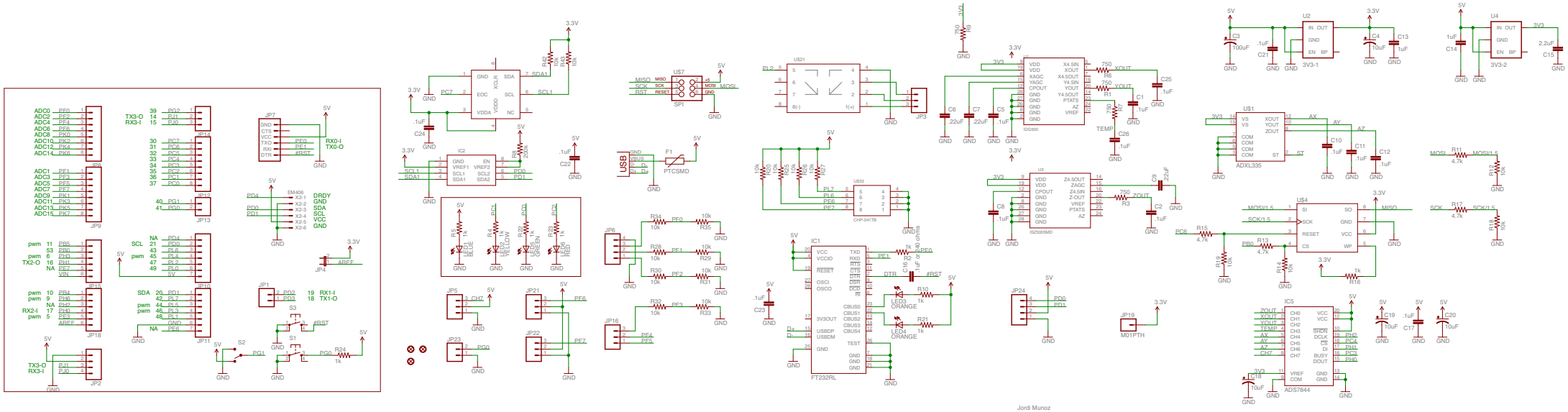

24.07.11 18:35 f=0.44 /Applications/EAGLE/projects/examples/ArduPilotMegaShield_F_v141.sch (Sheet: 1/1)